SEE LEGEND SHEET 45

FEEDPOINT R8L

LIGHTING STANDARDS AND BASES						
NO.	STA.	LT.	RT.	LOCATION	TYPE	WATTAGE
1	508+75		—	169NB	9-49	400
2	512+45		—			
3	516+15		—			
4	520+35		—			
5	524+25		—			
6	528+45		—	169NB	9-49	400
8	1+90		—	RAMP B	9-40	250
9	46+50	—		E. FR. RD.		
10	3+50	—		RAMP B		
11	51+00	—		E. FR. RD.		
12	53+10	—		E. FR. RD.	9-40	250
15	510+55	—		169SB	9-49	400
16	514+30	—				
17	518+60	—				
18	522+35	—				
19	526+35	—		169SB	9-49	400
(1) 21	524+70	—		SW ENT. RAMP	9-40	250
(1) 22	526+00	—		W. FR. RD.	9-40	250
(1) 23	528+35	—		W. FR. RD.	9-40	250
(2) 26	506+20			INPLACE		

(1) USE TH169SB ALIGNMENT FOR STATIONING
(2) RENUMBER POLE - INPLACE FROM PREVIOUS PROJECT

FEEDPOINT R8P

LIGHTING STANDARDS AND BASES						
NO.	STA.	LT.	RT.	LOCATION	TYPE	WATTAGE
25	55+20	—		E. FR. RD.	9-40	250
26	57+20	—		E. FR. RD.	9-40	250
27	532+45		—	169NB	9-49	400
28	530+45	—		169SB	9-49	400
29	530+65	—		W. FR. RD.	9-40	250
30	532+95	—		W. FR. RD.	9-40	250

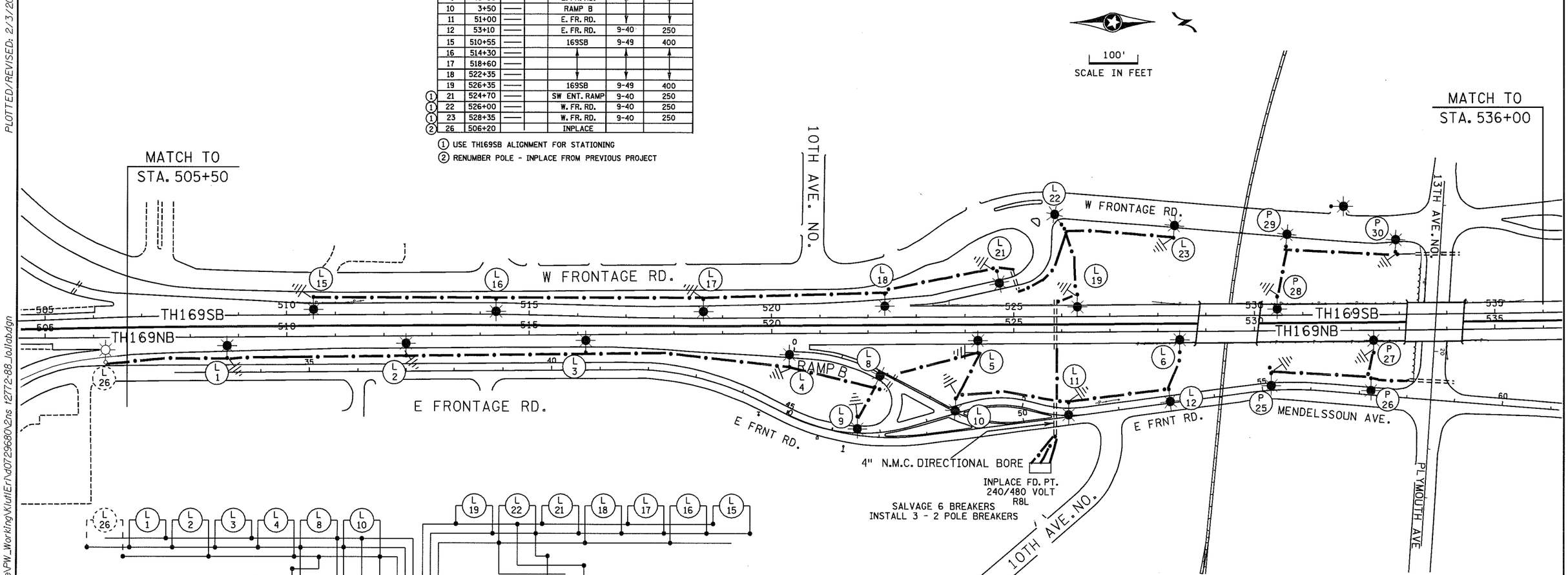

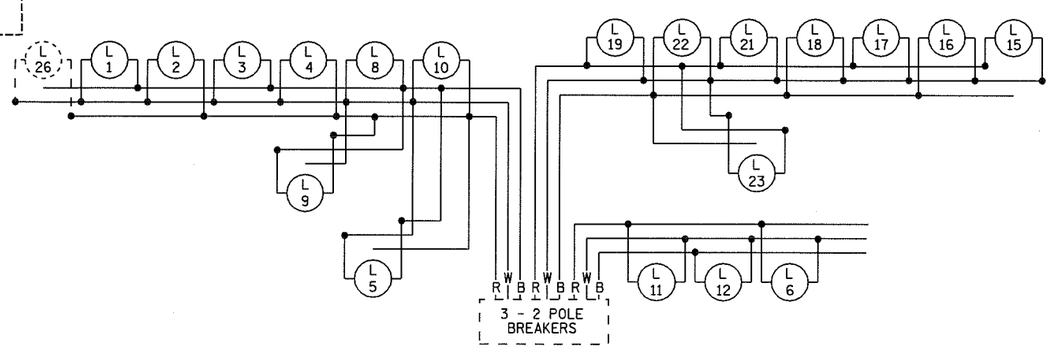

240/480 VOLT
FD. PT. R8L
W DENOTES NEUTRAL CONDUCTOR
B AND R DENOTE CURRENT CARRYING CONDUCTORS
DASHED LINES DENOTE INPLACE ITEMS

AS-BUILT
FEEDPOINT R8L

BY	DATE	REVISIONS
EK	2/01/10	Move 6 lights from R8L to R8P

DRAWN BY: NS CKD BY: GB DATE:

FEEDPOINT: R8L LOCATION: S.E. QUADRANT 10th AVE. NO.
METER ADDRESS:
CERTIFIED BY Michael P. Gubinsky LICENSED PROFESSIONAL ENGINEER LIC. NO. 19863 DATE: 4/21/2009

LIGHTING PLANS

STATE PROJ.NO. 2772-88 (T.H.169) SHEET NO.62 OF 74 SHEETS

PLOTTED/REVISED: 2/3/2010
DISTRICT #: METRO
IPLOT NAME: 2ns t2772-88_lo
PATH & FILENAME: c:\ProjectWise\PW_Working\KlutlErl\d0729680\2ns t2772-88_lo.lab.dgn