FEEDPOINT R8J

LIGHTING STANDARDS AND BASES						
NO.	STA.	LT.	RT.	LOCATION	TYPE	WATTAGE
1	486+05	—		169NB	9-49	400
2	489+10	—		169NB		
3	490+95	—		169NB		
4				INPLACE		
5	494+00	—				
6	497+00	—	—			
7	500+95		—	169NB		
8	502+85		—	169NB		
9	506+55	—		169SB		
10				INPLACE		
11	501+40			169SB	9-49	400
12	504+70	—				
13	499+15					
14	495+40					
15	492+45				9-49	400
16	489+65				9-40	250
17	487+50			169SB	9-49	400

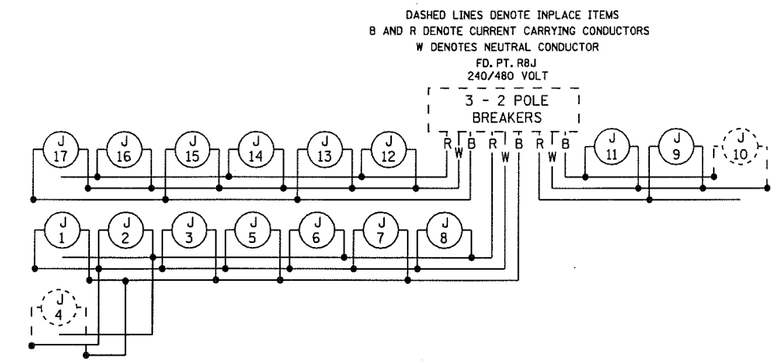

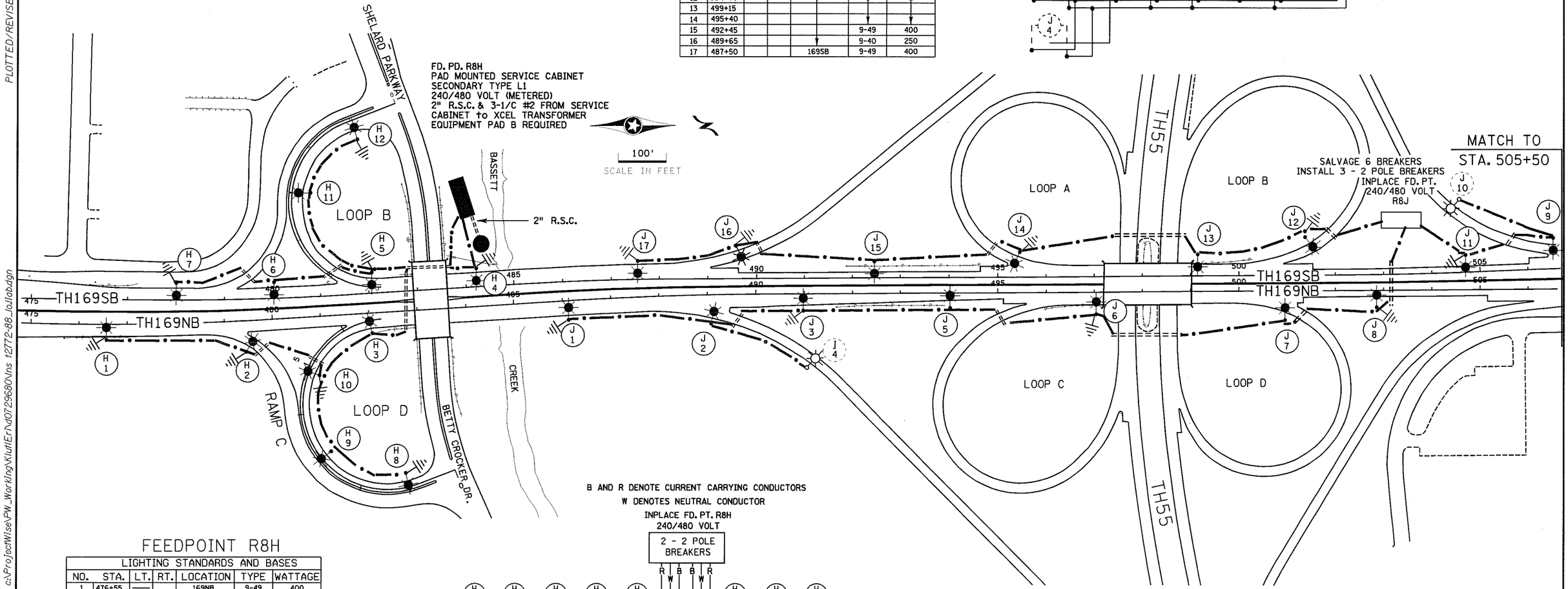

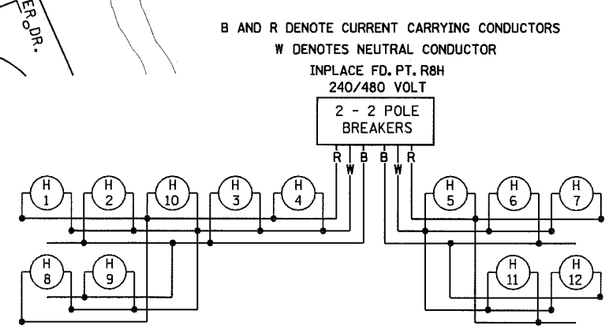

FEEDPOINT R8H

LIGHTING STANDARDS AND BASES						
NO.	STA.	LT.	RT.	LOCATION	TYPE	WATTAGE
1	476+55	—		169NB	9-49	400
2	479+50	—		169NB		
3	482+00	—		169NB		
4	484+25		—	169SB		
5	482+10		—			
6	480+00		—			
7	478+00		—	169SB	9-49	400
8	1+00	—		LOOP D	9-40	250
9	3+00	—		LOOP D		
10	4+90	—		LOOP D		
11	3+00		—	LOOP B		
12	1+00		—	LOOP B	9-40	250

AS-BUILT
FEEDPOINTS R8H, R8J

BY	DATE	REVISIONS
EK	2/2/10	MOVE R8H FEEDPOINT & CONDUITS

DRAWN BY: NS CKD BY: GB DATE:

FEEDPOINT: R8H - R8J LOCATION: BETTY CROCKER DR., TH55

METER ADDRESS:

CERTIFIED BY Michael P. Gubinsky LICENSED PROFESSIONAL ENGINEER LIC. NO. 19863 DATE: 4/21/2009

LIGHTING PLANS

STATE PROJ.NO. 2772-88 (T.H.169) SHEET NO.61 OF 74 SHEETS

PLOTTED/REVISED: 2/2/2010
DISTRICT #: METRO
IPLOT NAME: lns t2772-88_lo
PATH & FILENAME: c:\ProjectWise\PW_Working\KlutlEri\d0729680\lns t2772-88_lo.lab.dgn