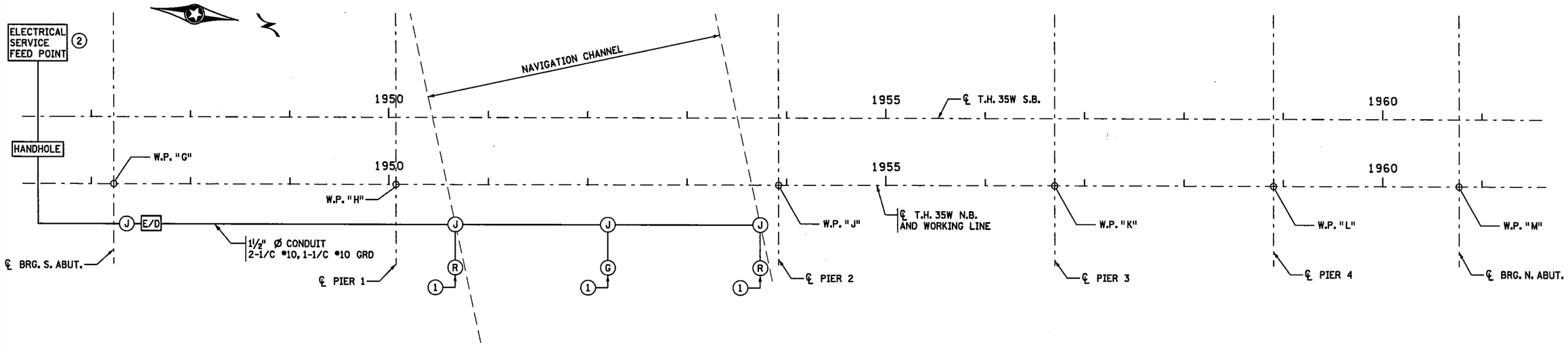

ELECTRICAL LAYOUT

LEGEND:

- (R) NAVIGATION LIGHT 180°, RED, CHANNEL MARGIN
- (G) NAVIGATION LIGHT 360°, GREEN, CENTER CHANNEL.
- (J) JUNCTION BOX
- [E/D] EXPANSION/DEFLECTION FITTINGS
- GRD GROUND

NOTES:

1. CHANNEL MARGIN NAVIGATION LIGHT
2. COORDINATE CONNECTIONS TO ELECTRICAL SERVICE WITH GRADING PLANS.

Plotted By: P0007740
Date Plotted: 08-NOV-2018
Time Plotted: 3:55:28 PM
Pen Table: MnDOT-Iplot.pen
File Path: 091_27W38_ElectricalPlan_det.dgn

REV. NO.	DATE	REVISION DESCRIPTION	APPR.

AMES TEAM PARSONS

MnDOT ACCEPTANCE — SIGNATURE — 12/18/18 DATE

CERTIFIED BY: Bradley J. Berg — LICENSED PROFESSIONAL ENGINEER — 12/13/18 DATE
NAME: BRADLEY J. BERG LIC. NO. 46696

TITLE: ELECTRICAL PLAN AND LAYOUT

DES: BJB DR: BJB CHK: AMP CHK: AMP APPROVED:

SHEET NO. 91 OF 119 SHEETS

BRIDGE NO. 27W38

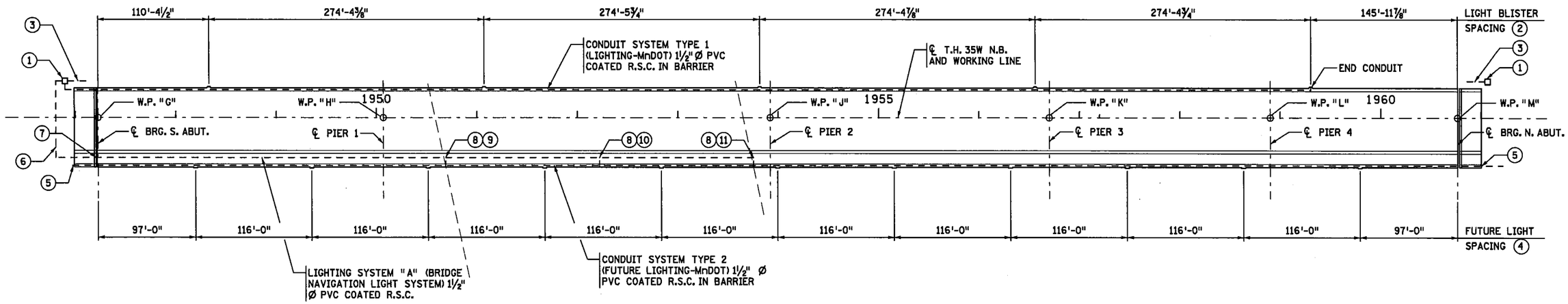

CONDUIT LAYOUT

CONDUIT SYSTEM TYPE 1 (LIGHTING) NOTES:

(1) HANDHOLE, CONNECT TO ROADWAY LIGHTING, SEE SHEET 93 AND GRADING PLANS FOR DETAILS.

(2) FOR LIGHT BLISTER DETAILS, SEE SHEET 93.

(3) CONNECTION FOR MONUMENT LIGHTING, SEE BR27W39 FOR MONUMENT LIGHTING DETAILS

CONDUIT SYSTEM TYPE 2 (FUTURE LIGHTING) NOTES:

(4) PROVIDE CONDUITS FOR CONNECTION TO LIGHTING AT EACH TYPE B BARRIER PILASTER. SEE SHEET 88. CONDUIT DETAILS IN PILASTERS AND AT END OF BRIDGE SIMILAR TO SHEET 93.

(5) CAP FUTURE CONDUIT AT BARRIER ENDS AT END OF APPROACH PANEL.

LIGHTING SYSTEM "A" (BRIDGE NAVIGATION LIGHT SYSTEM) NOTES:

CONDUIT TO BE HUNG BELOW DECK IN THE EXTERIOR BAY. SEE SHEET 94 FOR LOCATIONS AND DETAILS.

(6) CONNECT TO POWER SOURCE, SEE SHEET 91 AND GRADING PLANS FOR DETAILS.

(7) SLEEVE THROUGH SOUTH ABUTMENT. SEE SHEET 12.

(8) EXTEND CONDUIT TO JUNCTION BOX IN DECK OVERHANG. SEE SHEET 94 FOR DETAILS.

(9) STA. 1950+68.67

(10) STA. 1952+22.02

(11) STA. 1953+75.37

Plotted By: P0007740
Date Plotted: 08-NOV-2018
Time Plotted: 3:59:14 PM
Pen Table: MnDOT-Iplot.pen
File Path: 092_27W38_ConduitLayout_det.dgn

REV. NO.	DATE	REVISION DESCRIPTION	APPR.

AMES TEAM PARSONS

MnDOT ACCEPTANCE — SIGNATURE — 12/18/18 DATE

CERTIFIED BY: Bradley J. Berg — LICENSED PROFESSIONAL ENGINEER — 12/13/18 DATE

NAME: BRADLEY J. BERG LIC. NO. 46696

TITLE: CONDUIT LAYOUT

DES: BJB DR: BJB APPROVED:
CHK: AMP CHK: AMP

SHEET NO. 92 OF 119 SHEETS

BRIDGE NO. 27W38

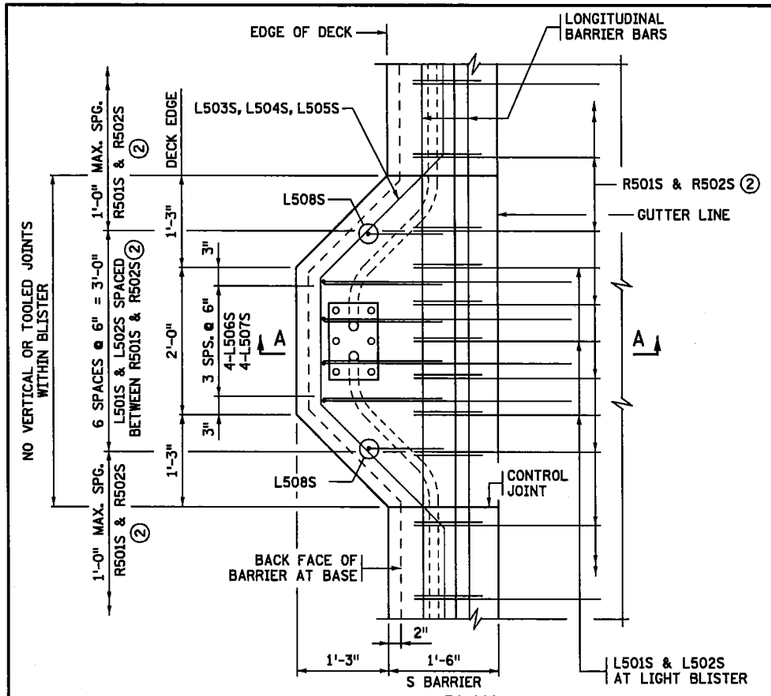

PLAN

LIGHT POLE ANCHORAGE ON TYPE S BARRIER ②

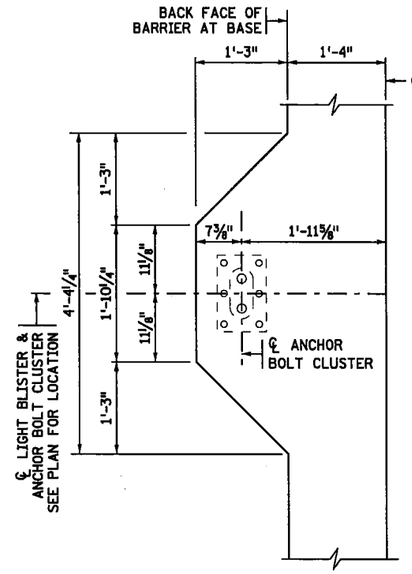

SECTION B-B

DECK NOT SHOWN FOR CLARITY

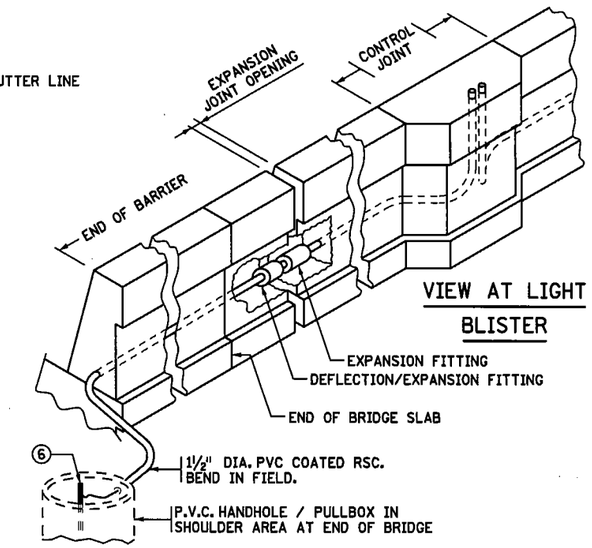

VIEW AT LIGHT BLISTER

VIEW AT END OF BRIDGE

APPROACH SLAB NOT SHOWN. EXPANSION JOINT SHOWN.

GENERAL NOTES

BOND AND GROUND THE CONDUIT SYSTEM (LIGHTING) IN ACCORDANCE WITH THE APPLICABLE PORTIONS OF SPEC. 2545.3.R.

① EXTEND THE 1½" DIA. PVC COATED RIGID STEEL CONDUIT 3" ABOVE THE BARRIER AND INSTALL CAP.

② SEE CONCRETE BARRIER SHEETS FOR TYPICAL BARRIER REINFORCEMENT.

③ BARS SHOWN ARE FOR ONE LIGHT BLISTER.

④ WRAP PER SPEC. 2565.3.D.7.

⑤ PROVIDE COMBINATION DEFLECTION/EXPANSION FITTING PER SPEC. 3839.

⑥ PLACE GROUND ROD IN EACH HANDHOLE WITH EXOTHERMIC WELD FROM ROD TO WIRE.

BILL OF REINFORCEMENT FOR BARRIER AT ONE LIGHT POLE ③

BAR	NO.	LENGTH	SHAPE	LOCATION
L501S	3	5'-7"		BARRIER DOWEL
L502S	3	9'-2"		BARRIER VERTICAL
L503S	2	8'-9"		LONGITUDINAL TIE
L504S	2	9'-7"		LONGITUDINAL TIE
L505S	3	10'-5"		LONGITUDINAL TIE
L506S	4	6'-2"		VERTICAL TIE
L507S	4	6'-8"		VERTICAL DOWEL
L508S	2	5'-8"		VERTICAL TIE

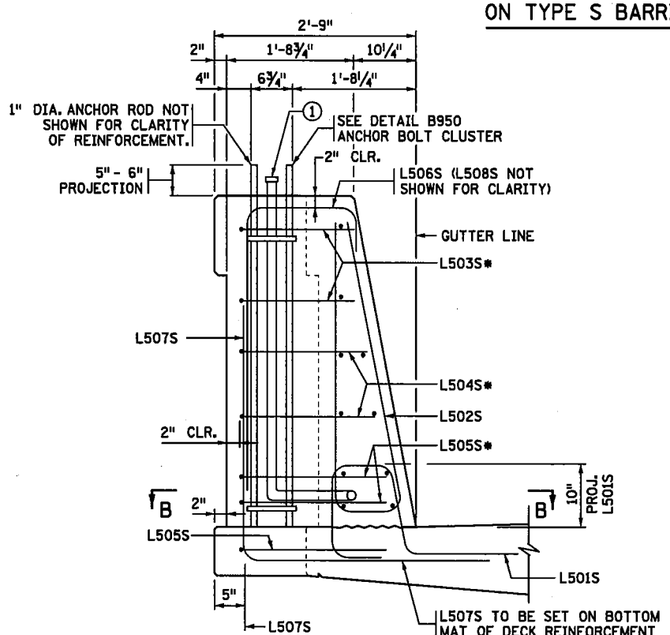

SECTION A-A ②

* L503S, L504S, L505S ARE SPACED WITH BARRIER LONGITUDINAL REINFORCEMENT. SEE CONCRETE BARRIER SHEET FOR SPACING.

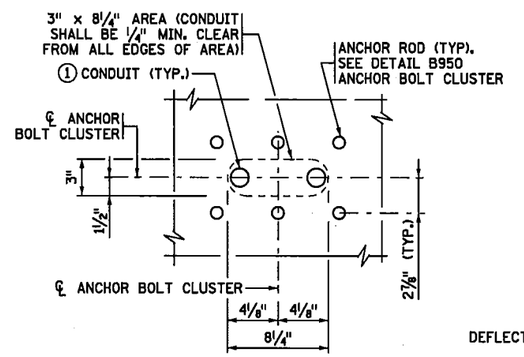

CONDUIT PLACEMENT DETAIL

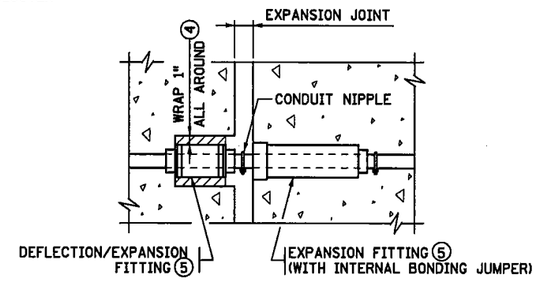

COMBINATION DEFLECTION/EXPANSION FITTING

IN BARRIER / SIDEWALK / CAST IN DECK

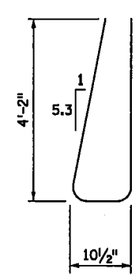

L502S

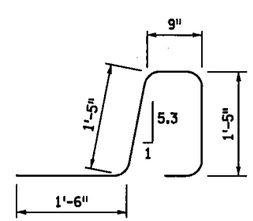

L501S

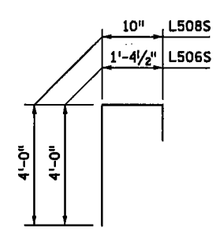

L506S, L508S

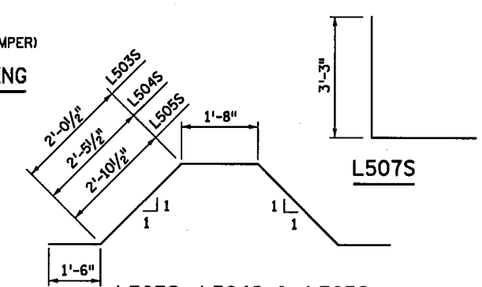

L503S, L504S & L505S

L507S

MODIFICATIONS: UPDATE TO 54 TYPE S BARRIER

ALL REINFORCEMENT IS STAINLESS.

FIG. 5-397.406(B) MOD.

REVISION:

APPROVED: AUGUST 24, 2016

STATE BRIDGE ENGINEER

REV. NO.	DATE	REVISION DESCRIPTION	APPR.

AMES TEAM PARSONS

MnDOT ACCEPTANCE — SIGNATURE — 12/18/18 DATE

CERTIFIED BY: LICENSED PROFESSIONAL ENGINEER — 12/13/18 DATE

NAME: BRADLEY J. BERG LIC. NO. 46696

TITLE: CONDUIT SYSTEM (LIGHTING) 54" TYPE S CONCRETE BARRIER BLISTER, WITHOUT WEARING COURSE

DES: BJB DR: BJB APPROVED:

CHK: AMP CHK: AMP

SHEET NO. 93 OF 119 SHEETS

BRIDGE NO. 27W38

Plotted By: P0007740
Date Plotted: 11-DEC-2018
Time Plotted: 12:35:42 PM
Pen Table: MnDOT-Iplot.pen
File Path: 093_27W38_ConduitSystem_det.dgn

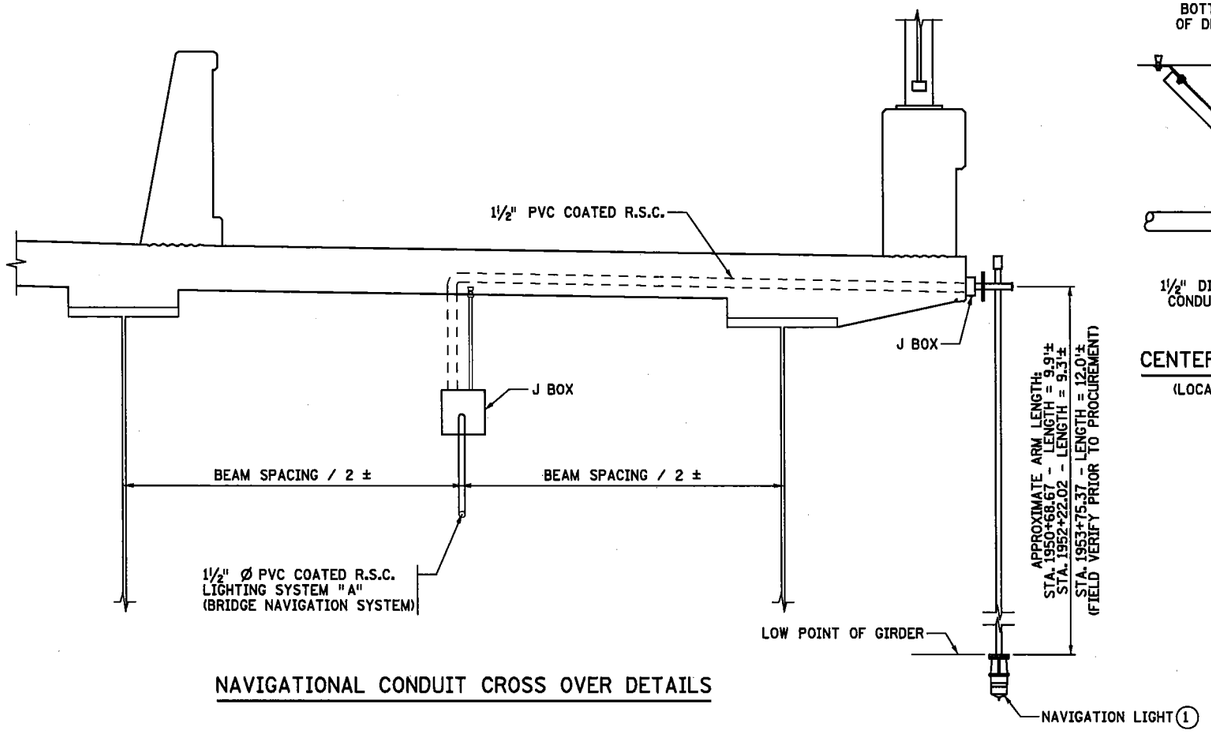

NAVIGATIONAL CONDUIT CROSS OVER DETAILS

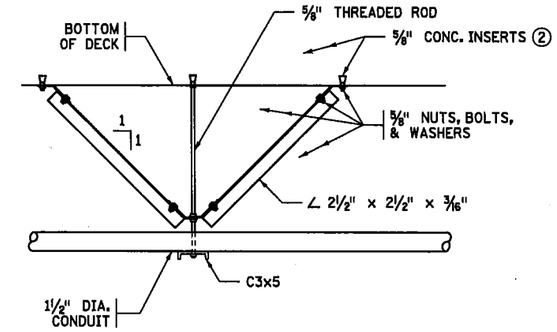

CENTERING DEVICE DETAIL - SIDE VIEW

(LOCATED ONLY ON A HANGER ADJACENT TO PIER)

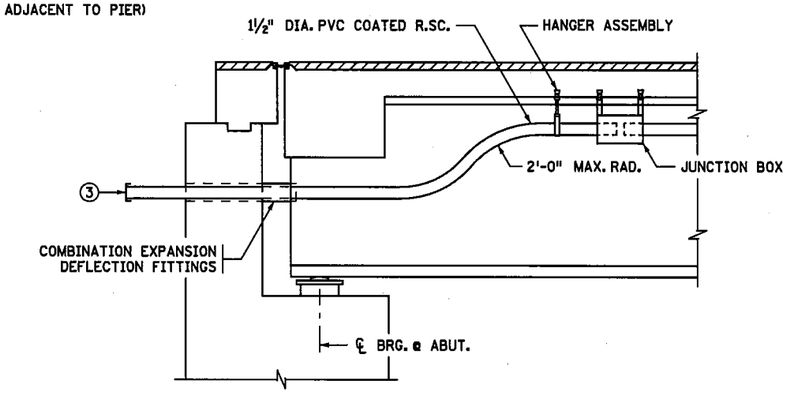

LONGITUDINAL SECTION

(FOR BRIDGE NAVIGATION LIGHT SYSTEM)

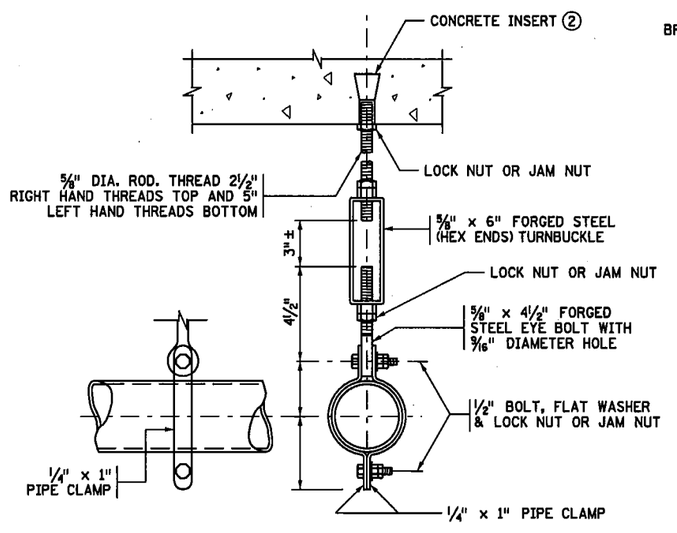

HANGER ASSEMBLY

EACH HANGER ASSEMBLY SHALL CONSIST OF CONCRETE INSERT, ⅝" DIA. ROD, PIPE CLAMPS, NUTS, BOLTS, WASHERS, TURNBUCKLE AND EYE BOLT

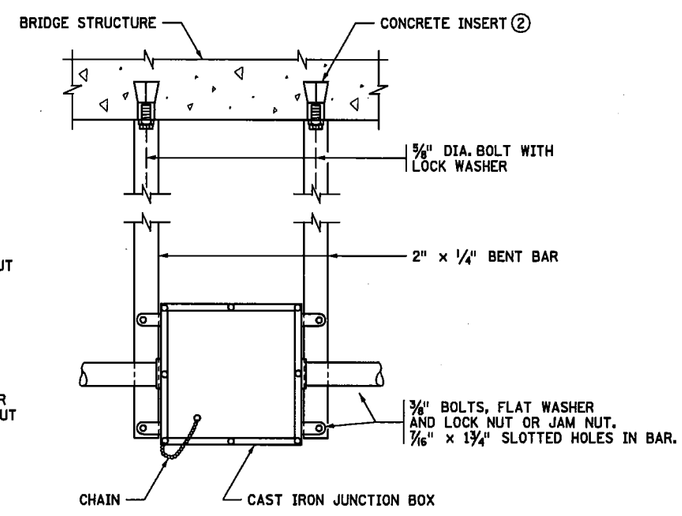

JUNCTION BOX DETAILS

GENERAL NOTES

RODS, EYE BOLTS AND PIPE CLAMPS SHALL COMPLY WITH SPEC. 3313, TYPE I.

TURNBUCKLES AND EYE BOLTS SHALL COMPLY WITH A.S.T.M. A235 CLASS A MINIMUM REQUIREMENTS.

FLAT BARS AND ANCHORAGES SHALL COMPLY WITH SPEC. 3306.

CONCRETE INSERTS SHALL BE APPROVED TYPE MALLEABLE IRON. MATERIAL AS PER SPEC. 3324, GRADE 35018. TAP AFTER GALVANIZING.

GALVANIZE BOLTS, NUTS, WASHERS, TURNBUCKLES, RODS, EYE BOLTS, AND INSERTS AS PER SPEC. 3392. GALVANIZE OTHER MATERIAL AS PER SPEC. 3394 AFTER FABRICATION.

PIPE SLEEVES SHALL COMPLY WITH SPEC. 3362.

1 FOR LIGHT TYPE AND ADDTIONAL DETAILS SEE SHEET 91.

2 SPACE INSERTS AT 10'-0" MAXIMUM CENTERS.

3 CAP ENDS.

MODIFICATIONS:
REMOVE UNUSED DETAILS.
ADD NAVIGATION LIGHT DETAILS.

FIG. 5-397.402 MOD.

Plotted By: P0007740
Date Plotted: 01-NOV-2018
Time Plotted: 2:31:58 PM
Pen Table: MnDOT-Iplot.pen
File Path: 094_27W38_ConduitDetails_det.dgn

REVISION: 05-24-2012

APPROVED: SEPTEMBER 26, 2003
STATE BRIDGE ENGINEER

REV. NO.	DATE	REVISION DESCRIPTION	APPR.

AMES TEAM PARSONS

MnDOT ACCEPTANCE
SIGNATURE 12/18/18 DATE

CERTIFIED BY: 12/13/18
LICENSED PROFESSIONAL ENGINEER DATE
NAME: BRADLEY J. BERG LIC. NO. 46696

TITLE: CONDUIT DETAILS

DES: BJB DR: BJB APPROVED:
CHK: AMP CHK: AMP

SHEET NO. 94 OF 119 SHEETS

BRIDGE NO. 27W38

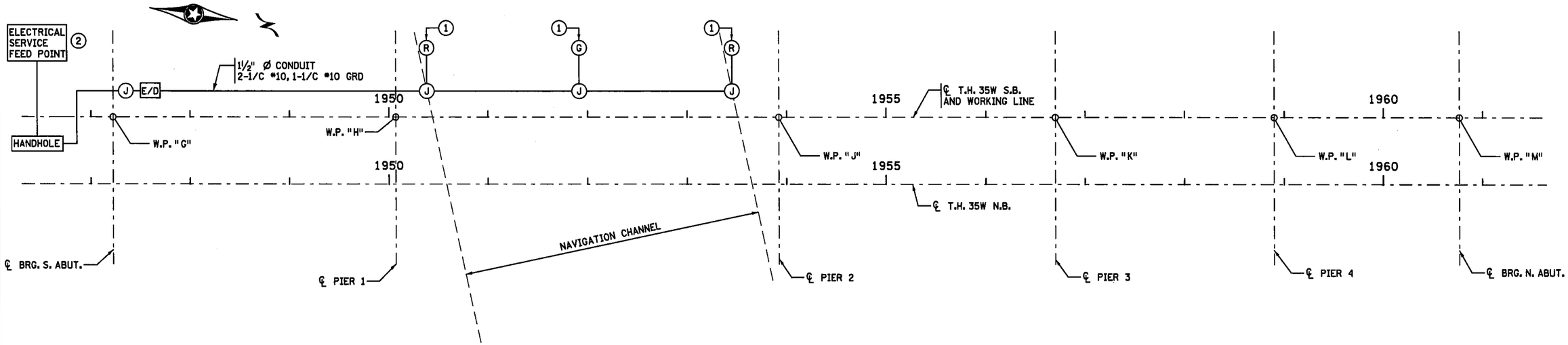

ELECTRICAL LAYOUT

LEGEND:

- (R) NAVIGATION LIGHT 180°, RED, CHANNEL MARGIN
- (G) NAVIGATION LIGHT 360°, GREEN, CENTER CHANNEL
- (J) JUNCTION BOX
- [E/D] EXPANSION/DEFLECTION FITTINGS
- GRD GROUND

NOTES:

1. CHANNEL NAVIGATION LIGHT
2. COORDINATE CONNECTIONS TO ELECTRICAL SERVICE WITH LIGHTING PLANS.

Plotted By: p0093395d
Date Plotted: 18-MAR-2019
Time Plotted: 2:08:06 PM
Pen Table: MnDOT-Iplot.pen
File Path: 088_27W39_ElectricalPlan_det.dgn

REV. NO.	DATE	REVISION DESCRIPTION	APPR.

AMES TEAM PARSONS

MnDOT ACCEPTANCE
SIGNATURE 4/30/19 DATE

CERTIFIED BY: Bradley J. Berg 4/24/19
LICENSED PROFESSIONAL ENGINEER DATE
NAME: BRADLEY J. BERG LIC. NO. 46696

TITLE: ELECTRICAL PLAN AND LAYOUT

DES: BJB DR: BJB APPROVED:
CHK: AMP CHK: AMP

SHEET NO. 88 OF 99 SHEETS

BRIDGE NO. 27W39

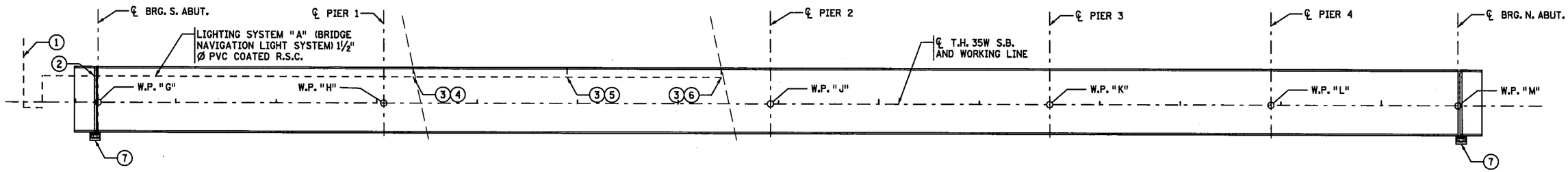

CONDUIT LAYOUT

CONDUIT SYSTEM TYPE 1 (LIGHTING) NOTES:

7. SEE BR. 27W38 FOR MONUMENT LIGHTING CONNECTION DETAILS.

LIGHTING SYSTEM "A" (BRIDGE NAVIGATION LIGHT SYSTEM) NOTES:

CONDUIT TO BE HUNG BELOW DECK IN THE EXTERIOR BAY. SEE SHEET 90 FOR LOCATIONS AND DETAILS.

1. CONNECT TO POWER SOURCE, SEE SHEET 88 AND LIGHTING PLANS FOR DETAILS.
2. SLEEVE THROUGH SOUTH ABUTMENT. SEE SHEET 12.
3. EXTEND CONDUIT TO JUNCTION BOX IN DECK OVERHANG. SEE SHEET 90 FOR DETAILS.
4. STA. 1950+36.40
5. STA. 1951+89.75
6. STA. 1953+43.10

Plotted By: p009395d
Date Plotted: 18-MAR-2019
Time Plotted: 2:19:11 PM
Pen Table: MnDOT-iplot.pen
File Path: 089_27W39_ConduitLayout_det.dgn

REV. NO.	DATE	REVISION DESCRIPTION	APPR.

AMES TEAM PARSONS

MnDOT ACCEPTANCE — SIGNATURE — 4/30/19 DATE

CERTIFIED BY: Bradley J. Berg — LICENSED PROFESSIONAL ENGINEER — 4/24/19 DATE

NAME: BRADLEY J. BERG LIC. NO. 46696

TITLE: CONDUIT LAYOUT

DES: BJB	DR: BJB	APPROVED:
CHK: AMP	CHK: AMP	

SHEET NO. 89 OF 99 SHEETS

BRIDGE NO. 27W39

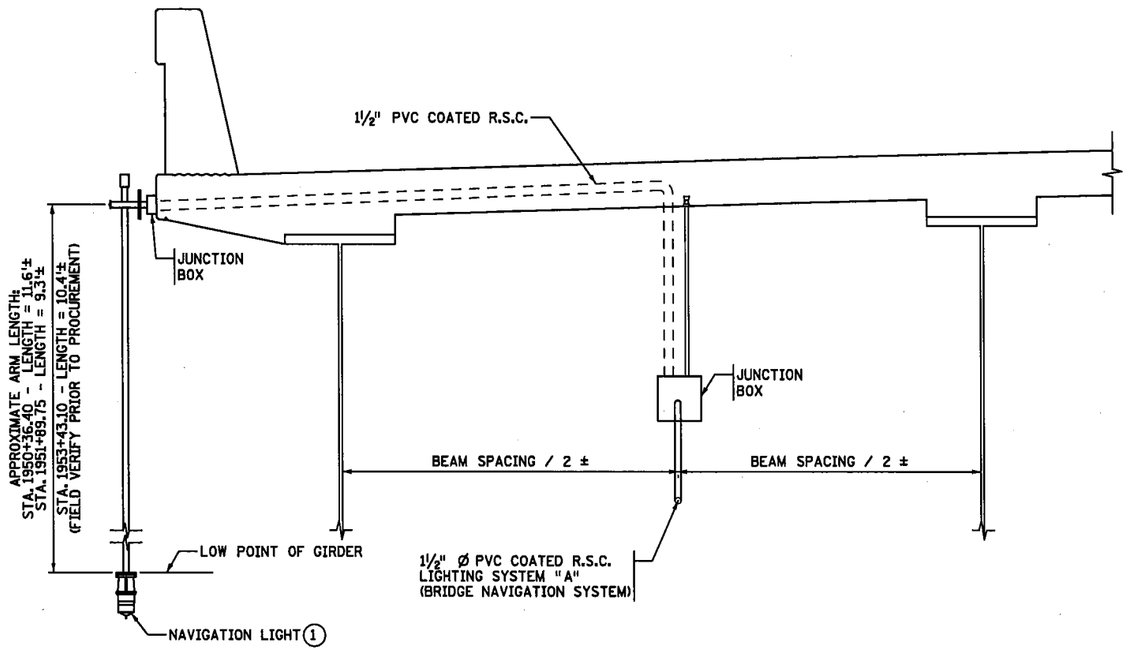

NAVIGATIONAL CONDUIT CROSS OVER DETAILS

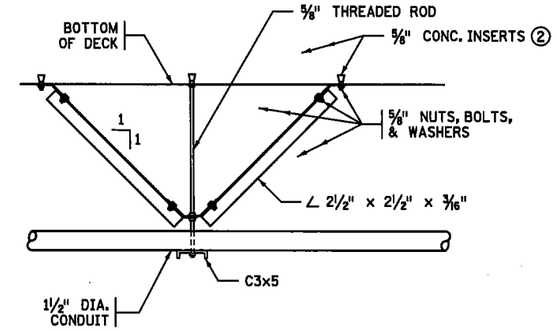

CENTERING DEVICE DETAIL - SIDE VIEW

(LOCATED ONLY ON A HANGER ADJACENT TO PIER)

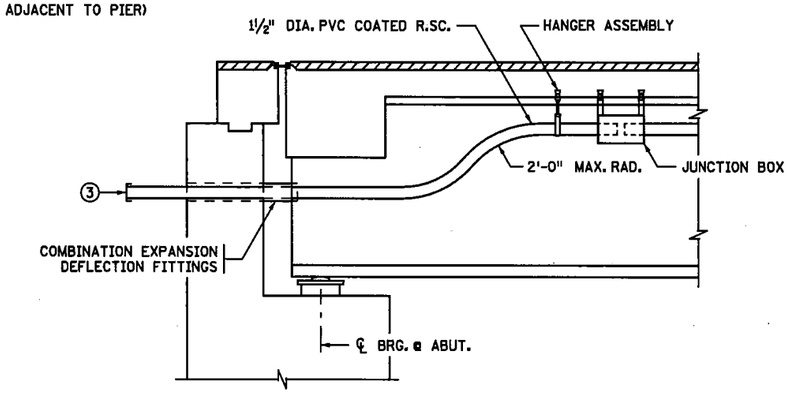

LONGITUDINAL SECTION

(FOR BRIDGE NAVIGATION LIGHT SYSTEM)

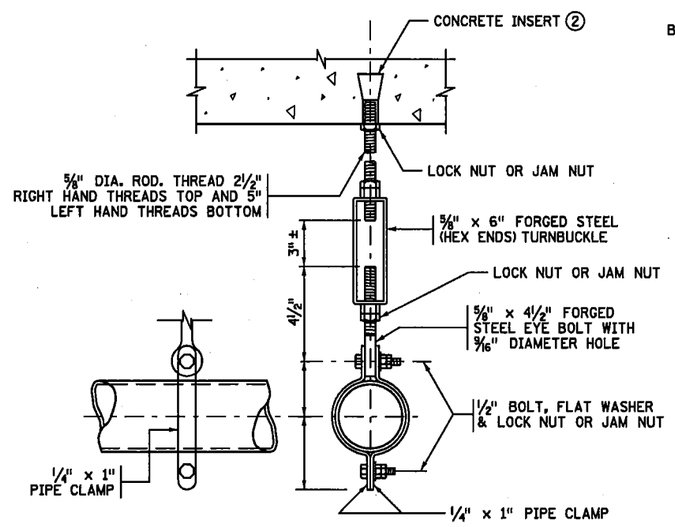

HANGER ASSEMBLY

EACH HANGER ASSEMBLY SHALL CONSIST OF CONCRETE INSERT, ⅝" DIA. ROD, PIPE CLAMPS, NUTS, BOLTS, WASHERS, TURNBUCKLE AND EYE BOLT

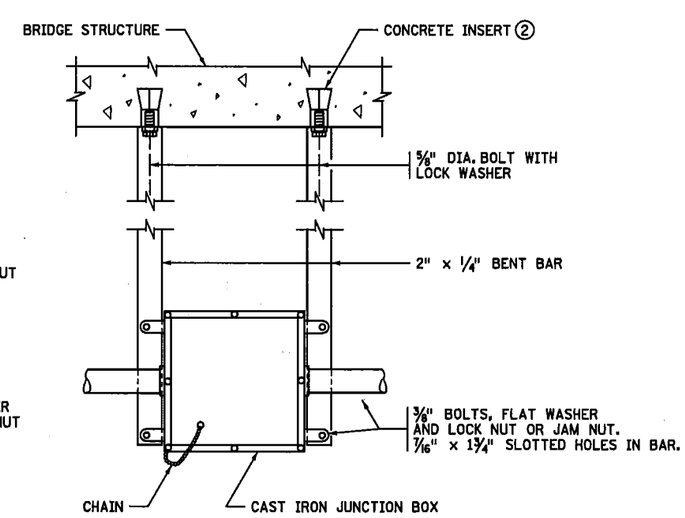

JUNCTION BOX DETAILS

GENERAL NOTES

RODS, EYE BOLTS AND PIPE CLAMPS SHALL COMPLY WITH SPEC. 3313, TYPE I.

TURNBUCKLES AND EYE BOLTS SHALL COMPLY WITH A.S.T.M. A235 CLASS A MINIMUM REQUIREMENTS.

FLAT BARS AND ANCHORAGES SHALL COMPLY WITH SPEC. 3306.

CONCRETE INSERTS SHALL BE APPROVED TYPE MALLEABLE IRON. MATERIAL AS PER SPEC. 3324, GRADE 35018. TAP AFTER GALVANIZING.

GALVANIZE BOLTS, NUTS, WASHERS, TURNBUCKLES, RODS, EYE BOLTS, AND INSERTS AS PER SPEC. 3392. GALVANIZE OTHER MATERIAL AS PER SPEC. 3394 AFTER FABRICATION.

PIPE SLEEVES SHALL COMPLY WITH SPEC. 3362.

1 FOR LIGHT TYPE AND ADDTIONAL DETAILS SEE SHEET 88.

2 SPACE INSERTS AT 10'-0" MAXIMUM CENTERS.

3 CAP ENDS.

MODIFICATIONS:
REMOVE UNUSED DETAILS.

ADD NAVIGATION LIGHT DETAILS.

FIG. 5-397.402 MOD.

REVISION: 05-24-2012

APPROVED: SEPTEMBER 26, 2003
STATE BRIDGE ENGINEER

REV. NO.	DATE	REVISION DESCRIPTION	APPR.

AMES TEAM PARSONS

MnDOT ACCEPTANCE
SIGNATURE 4/30/19 DATE

CERTIFIED BY: Bradley J. Berg 4/24/19
LICENSED PROFESSIONAL ENGINEER DATE
NAME: BRADLEY J. BERG LIC. NO. 46696

TITLE: CONDUIT DETAILS

DES: BJB DR: BJB APPROVED:
CHK: AMP CHK: AMP

SHEET NO. 90 OF 99 SHEETS

BRIDGE NO. 27W39

Plotted By: p0093395d
Date Plotted: 18-MAR-2019
Time Plotted: 1:57:02 PM
Pen Table: MnDOT-Iplot.pen
File Path: 090_27W39_Conduit+Details_det.dgn